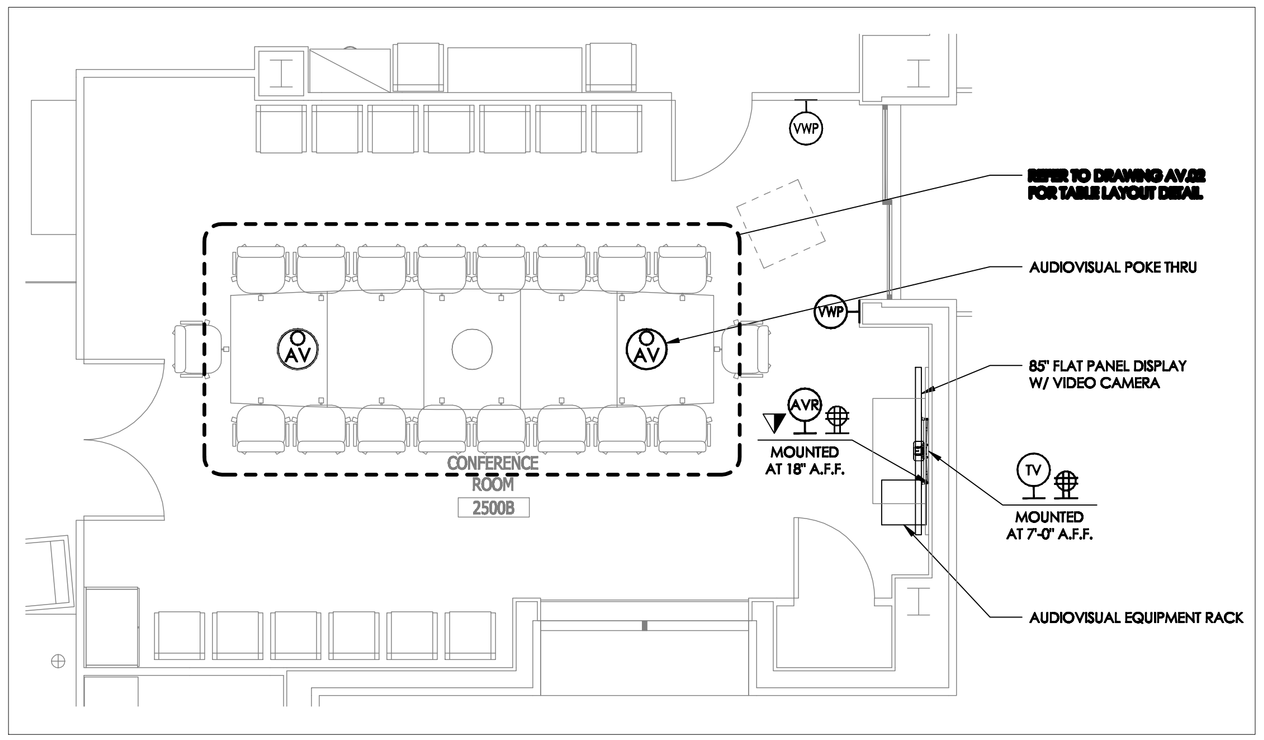

AUDIOVISUAL EQUIPMENT PLAN

CONFERENCE ROOM 2500B
1/4" = 1'-0"

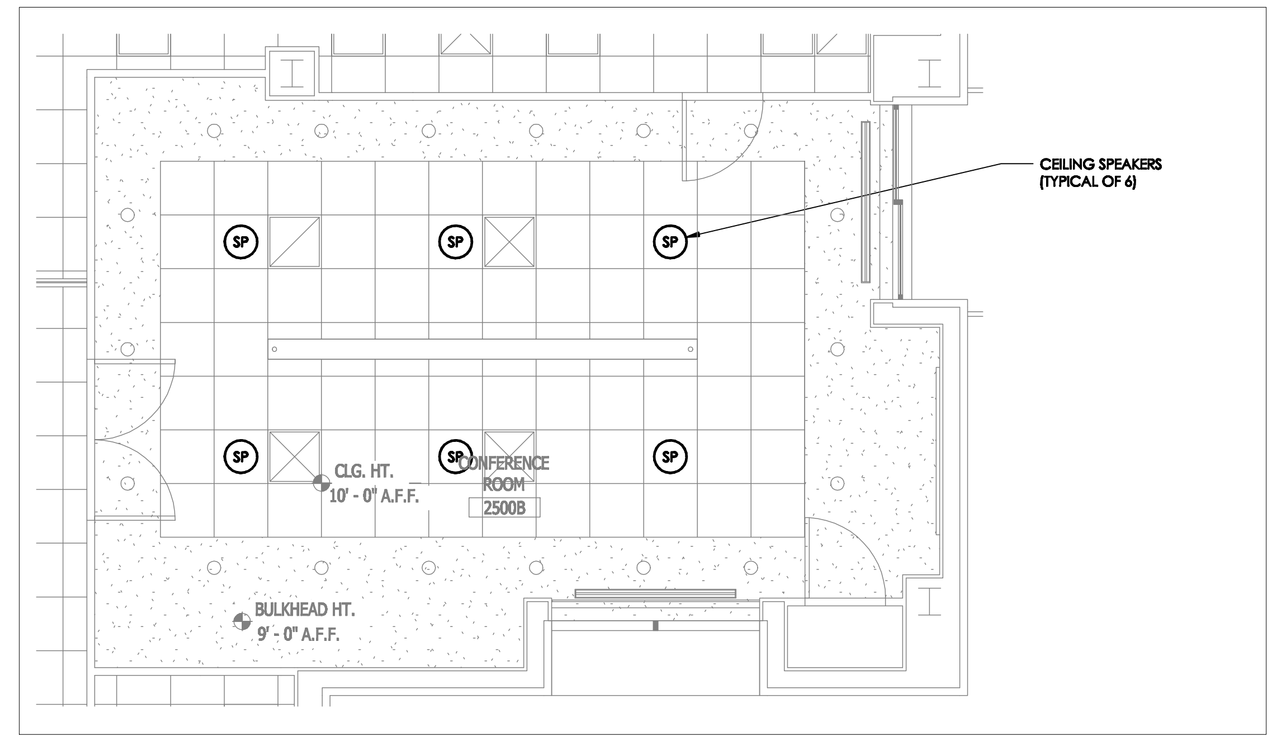

AUDIOVISUAL CEILING PLAN

CONFERENCE ROOM 2500B
1/4" = 1'-0"

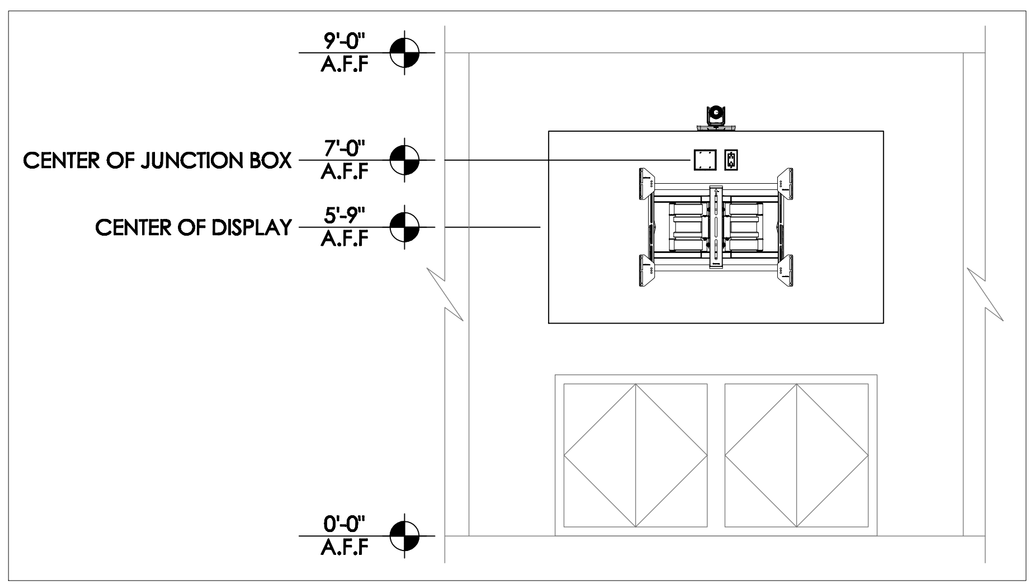

AUDIOVISUAL ELEVATION

CONFERENCE ROOM 2500B
1/2" = 1'-0"

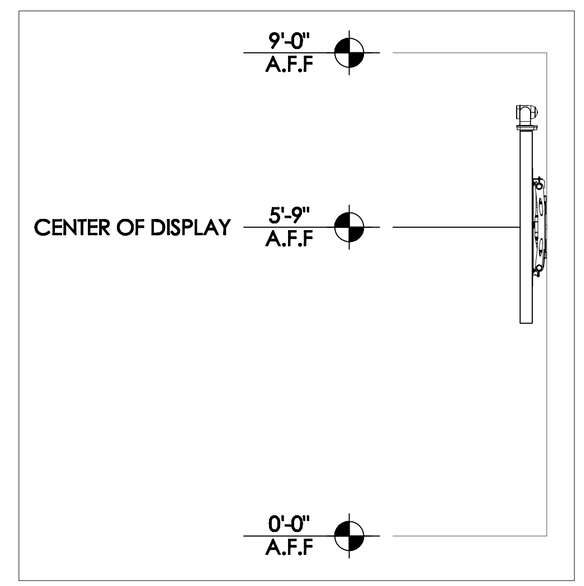

AUDIOVISUAL EQUIPMENT PLAN

CONFERENCE ROOM 2500B
1/4" = 1'-0"

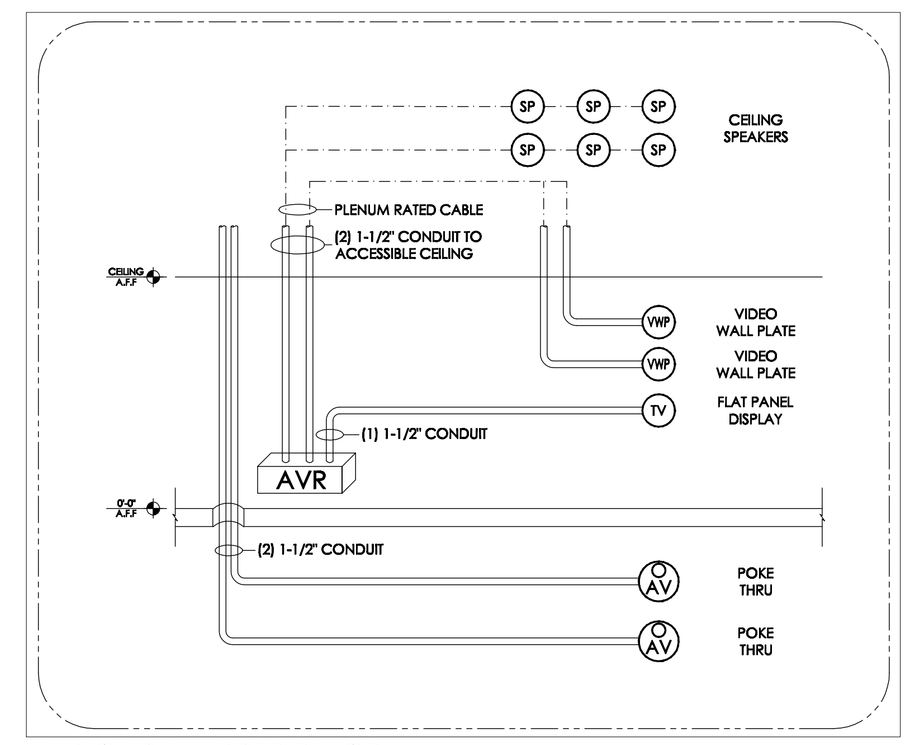

AUDIOVISUAL RISER DIAGRAM

CONFERENCE ROOM 2500B

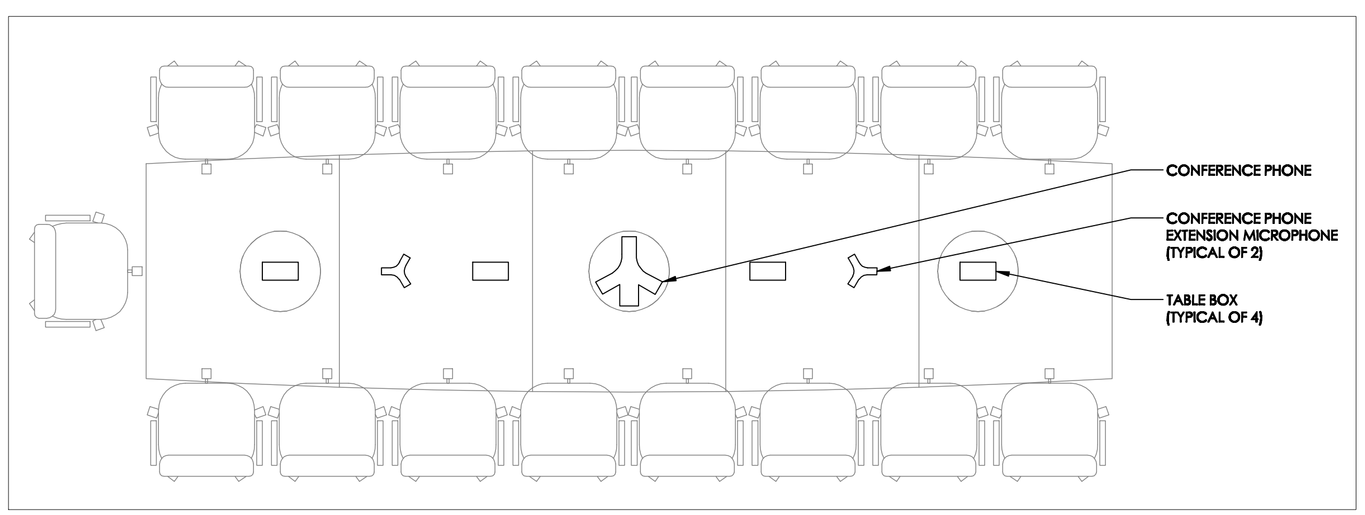

AUDIOVISUAL TABLE LAYOUT

CONFERENCE ROOM 2500B
1/2" = 1'-0"

IBI GROUP
Architects, Planners & Interior Designers
1505 Prince Street - Suite 200
Alexandria VA 22314-2852 USA
tel 703 836 9600 fax 703.836.2484
ibigroup.com

Project Title: Design Intent Documents for Interior Improvement to: Clerk of the Superior Court | Suite 2500

Client Name: District of Columbia Courts

Building Address: H. Carl Moultrie I Courthouse
500 Indiana Avenue, NW
Washington, DC 20001

ISSUED FOR	DATE
APPROVALS	DATE

NO.	DESCRIPTION	DATE	BY

This drawing and the design shown hereon are the property of IBI Group formerly Gruzen Samton. The reproduction, copying, or other use of the drawing without their written consent is prohibited and any infringement will be subject to legal action.

Accepted By:
Joseph E. Sanchez, Jr.
Capital Projects and Facilities Management Officer
Contracting Officer
District of Columbia Courts

MILLER, BEAM & PAGANELLI, INC.
CONSULTING ENGINEERS, PLANNERS & INTERIOR DESIGNERS
12540 SOUTH LAKES DRIVE
SUITE 104
RESTON, VIRGINIA 20191
WWW.MILLERBP.COM
(TEL) 703.834.0000
(FAX) 703.834.0039

DRAWINGS ARE FOR INFORMATION ONLY

CONFERENCE ROOM 2500B EQUIPMENT LAYOUT

Date: 05.31.2016
Scale: AS SHOWN
Checked by: BOP
Drawn by: BHP
Planned By: BOP

DESIGN INTENT DOCUMENTS ONLY: NOT FOR CONSTRUCTION

Contractors to Verify Dimensions on Site
Do Not Scale this Drawing

AV.02

Location: