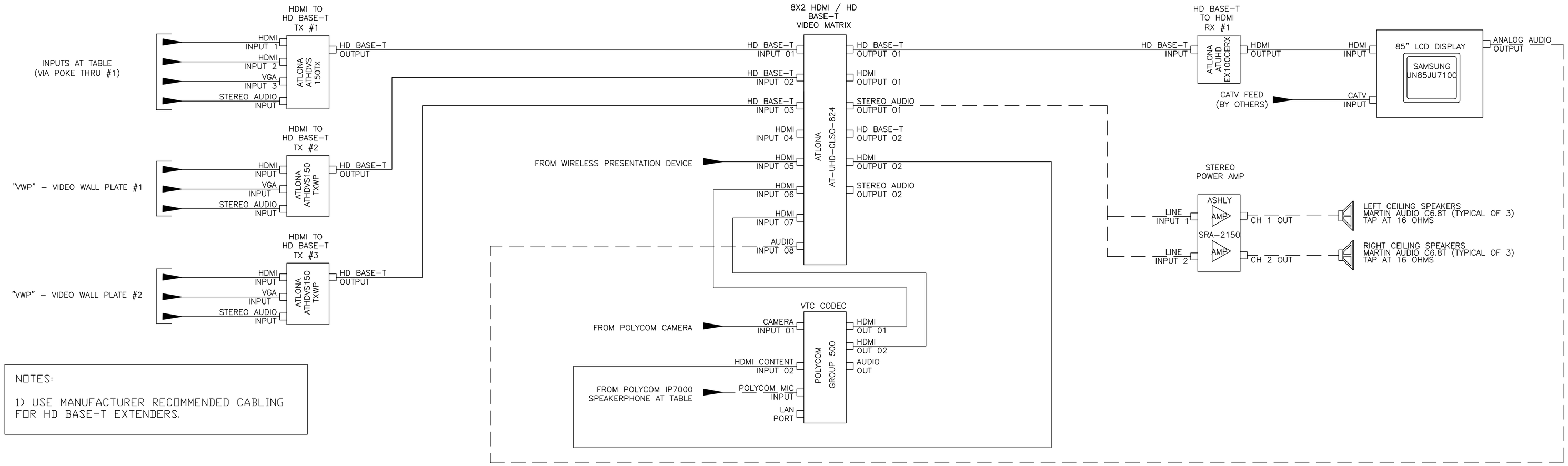

NOTES:

1) USE MANUFACTURER RECOMMENDED CABLING FOR HD BASE-T EXTENDERS.

CONTROL SYSTEM NOTES:

1) PROVIDE XML CONTROL FOR WEB BASED CONTROL OF AV SYSTEM.

2)SUBMIT TOUCH PANEL PAGES FOR REVIEW A MINIMUM OF (4) WEEKS PRIOR TO IMPLEMENTATION.

3) PROVIDE VIDEO AND AUDIO SOURCE SELECTION AND ROUTING PAGES.

4) PROVIDE (1) TST-902 TOUCH PANEL

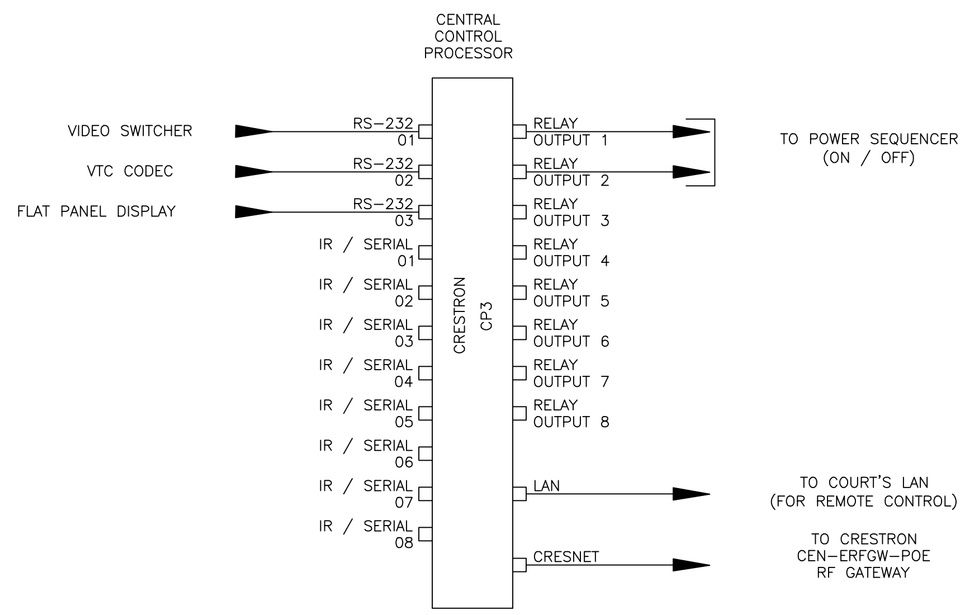

AV CONTROL SYSTEM SCHEMATIC

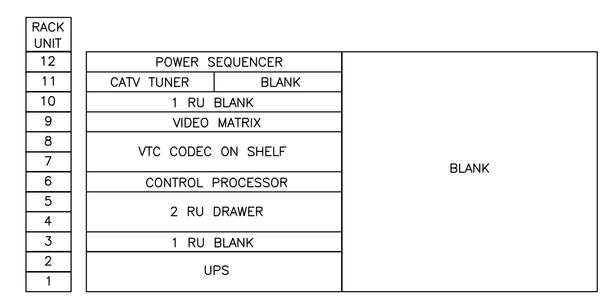

CONFERENCE ROOM
EQUIPMENT RACK INSIDE
DWI CUSTOM CREDENZA

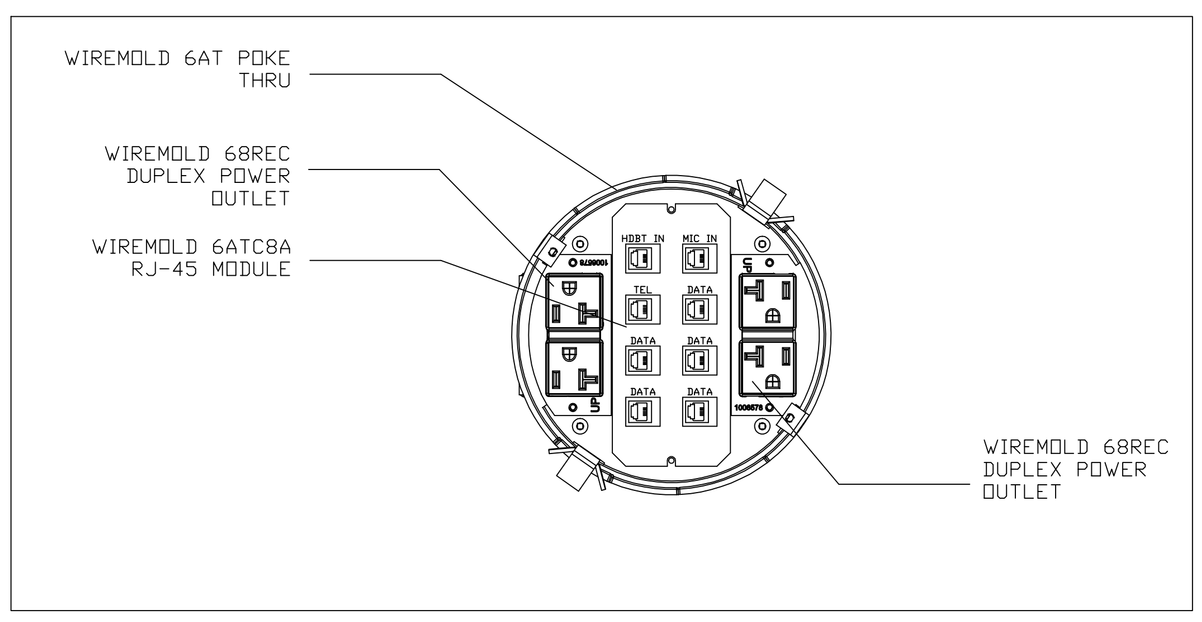

AV POKE THRU #1 DETAIL

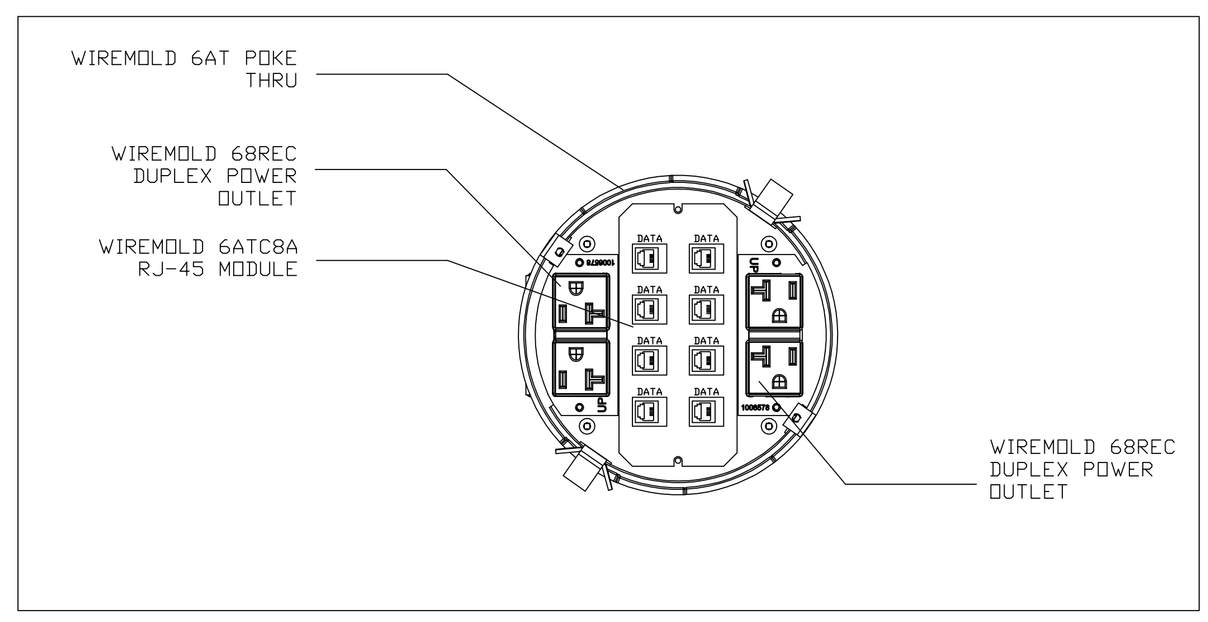

AV POKE THRU #2 DETAIL

MILLER, BEAM & PAGANELLI, INC.
CONSULTING ELECTRICAL ENGINEERS
13240 BOWIN LAKES DRIVE
SUITE 104
HERNDON, VIRGINIA 20171
WWW.MILLERBP.COM
(703) 709.9104/0000
(FAX) 703.934.0707

DRAWINGS ARE FOR INFORMATION ONLY

ARCHITECT

IBI GROUP
Architects, Planners & Interior Designers
1505 Prince Street - Suite 200
Alexandria VA 22314-2852 USA
tel 703 836 9600 fax 703.836.2484
ibigroup.com

PROJECT

Design Intent Documents for Interior Improvement to: Clerk of the Superior Court | Suite 2500
Project Title

District of Columbia Courts
Client Name

H. Carl Moultrie I Courthouse
500 Indiana Avenue, NW
Washington, DC 20001
Building Address

KEYPLAN

SUBMISSION

ISSUED FOR	DATE

APPROVALS	DATE

REVISIONS

NO.	DESCRIPTION	DATE	BY

This drawing and the design shown hereon are the property of IBI Group formerly Gruzen Samton. The reproduction, copying, or other use of the drawing without their written consent is prohibited and any infringement will be subject to legal action.

Accepted By:
Joseph E. Sanchez, Jr.
Capital Projects and Facilities Management Officer
Contracting Officer
District of Columbia Courts

TITLE

SCHEMATIC DIAGRAMS, PLATE DETAILS & RACK ELEVATION

Date: 05.31.2016
Scale: AS SHOWN
Checked by: BOP
Drawn by: BHP
Planned By: BOP

DESIGN INTENT DOCUMENTS ONLY: NOT FOR CONSTRUCTION

Contractors to Verify Dimensions on Site
Do Not Scale this Drawing

SHEET

AV.03

Location: